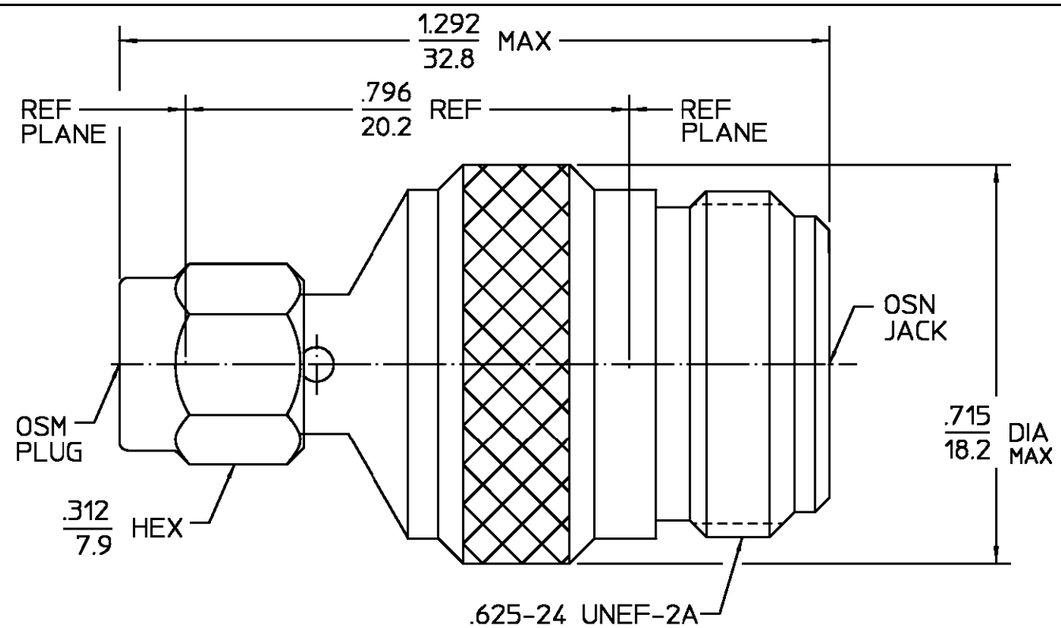

REVISIONS			
REV	DESCRIPTION	DATE	APPROVED
01 3	REVISED	07/14/94	

ELECTRICAL

Nominal Impedance (Ohms) 50
Frequency Range (GHz) DC to 15
Volt Rating (VRMS MAX)
@ Sea Level 335
VSWR DC - 12.4GHz: 1.05+.005f(GHz) MAX
12.4 - 15.0GHz: .83+.023f(GHz) MAX
Insertion Loss (dB MAX) .18 @ 9GHz
RF Leakage (dB MIN) -65 @ 2-3 GHz
Corona, 70,000 Ft (VRMS MIN) 250
Dielectric Withstanding Voltage
(VRMS MIN) @ Sea Level 1,000
Contact Resistance (Milliohms MAX)
Center Contact 4.1
Outer Contact 2.2
Cable to Housing N/A
RF High Potential @ Sea Level
(VRMS MIN @ 5 MHz) 1,000
I.R.(Megohms MIN) 5,000

MECHANICAL

Interface Dimensions MIL-STD-348A,
Fig. 310.1 (OSM) & 304.2 (N)
Recommended Mating Torque:
OSM: 7-10 in-lbs
Type N: 12-15 in-lbs
Mating Characteristics:
OSM-Insertion (MAX lbs) N/A
Type N-Insertion (MAX lbs) 2.0
OSM-Withdrawal (MIN oz) N/A
Type N-Withdrawal (MIN oz) 2.0
Force to Engage and Disengage
OSM (in-lbs MAX) 2.0
Type N (in-lbs MAX) 6.0
Center Contact Captivation
Axial (lbs) 6.0
Radial (in-oz) N/A
Cable Retention
Axial Force (lbs) N/A
Torque (in-oz) N/A
Weight (Grams) TBD

ENVIRONMENTAL

Temperature Rating -65°C to +125°C
Vibration MIL-STD-202, Method
204, Condition B
Shock MIL-STD-202, Method 213,
Condition I.
Thermal Shock MIL-STD-202,
Method 107, Condition C,
except high temp shall be +115°C
Moisture Resistance MIL-STD-202,
Method 106
Corrosion - MIL-STD-202, Method
101, Condition B, 5% salt spray

.XXX = in
XX.X = mm

COMPONENT	MATERIAL	FINISH
HOUSING COUPLING NUT	STAINLESS STEEL PER ASTM-A484 AND ASTM-A582, TYPE 303	PASSIVATE PER ASTM-A380
DIELECTRIC	TFE FLUOROCARBON PER ASTM-D-1457	N/A
CENTER CONTACT	BERYLLIUM COPPER PER ASTM B 196, ALLOY C17300, CONDITION H	GOLD PLATE PER MIL-G-45204
RETAINING RING	BERYLLIUM COPPER PER ASTM B 194, ALLOY C17200, CONDITION H	N/A
GASKET	SILICONE RUBBER PER ZZ-R-765	N/A

UNLESS OTHERWISE SPECIFIED DIMENSIONS ARE IN INCHES
TOLERANCE ON
FRAC. ± 1/64 DEC. ±.005 ANGLES ± 1°

DRAWN BY	DRW	5/25/77
CHECKED BY	KWW	5/26/77
APP'D BY	RMF	5/31/77

AMP Incorporated
140 Fourth Avenue
Waltham, MA 02451-7599

These drawings and specifications are the property of M/A-COM Interconnect Division and shall not be reproduced or copied or used in whole or in part as the basis for the manufacture or sale of item(s) without written permission.

USE ASS'Y PROCEDURE

NO. A.P. N/A

TITLE OSM PLUG TO OSN JACK ADAPTER

SIZE	CODE IDENT NO.		REV
B	26805	3082-2241-00	01 3
SCALE 4:1		N/A	SHEET 1 OF 1

CUSTOMER DRAWING

AMP PART # 1057381-1
SHEET 1 OF 1 REV A